SPECIAL PACKAGING INSTRUCTIONS

CODE ID	SPI NO. (TPO)
98752	01-132-7318
	SHEET 1 OF 3

PART OR DRAWING NO.	NATIONAL STOCK NO.	CURRENT REV
2F1-6-42362-110	1560-01-132-7318FX	
ITEM NOMENCLATURE		ORIGINAL DATE
TANK FUEL AIRCRAFT		89241

ILL T. GRABOVSKI
CHK MOTT
ENG PURVIS
AUTH J. STUCKEY

PRESERVATION

LEVEL A METHOD I
LEVEL B METHOD I
LEVEL C METHOD I

ICQ
QUP 1
CLEANING IAW MIL-P-116
DRYING IAW MIL-P-116
PRESERVATIVE SEE NOTE

PACKING AS SPECIFIED BELOW AND BILL OF MATERIAL

LEVEL	SPEC	STYLE	TYPE	CL	VAR	GRADE
A	PPP-B-601	A	O/S			B
B	PPP-B-601	A	O/S			B
C	PPP-B-601	A	O/S			B

	LEVEL A	LEVEL B	LEVEL C
GROSS CU FT	36.34	36.34	36.34
GROSS WT LBS	152	152	152
DESIGN FRAG. G'S	110	110	110

MARKING

SPECIAL MARKING:
A) SPI NO.01-132-7318
B) REUSABLE CONTAINER
DO NOT DESTROY

	LENGTH	WIDTH	DEPTH
CNTNR I.D.	68	35	18 3/4
CNTNR O.D.	70 1/4	37 1/4	24
ITEM DIM	67	34	17 1/4
ITEM WT LBS	60		

C) ON CONTAINER TOP IN 1/2 INCH LETTERS
TANKS TEMPERATURE MUST BE ABOVE 65°F BEFORE MOVING OR FLEXING TANKS.

REVISED
BOX SIZE CHANGED

CAUTION

FOR PROPER HANDLING AND PROTECTION, CONSULT T.PO.00-85A-03-1 BEFORE HANDLING TANKS. WHEN NEW TANKS ARE REMOVED FROM CONTAINER, TAG, STATING " NEW TANKS -PURGING NOT REQUIRED" WILL BE REMOVED.

PRESERVATION

EXCEPT FOR GOODYEAR NYLON (VITHANE) FUEL TANKS, REPAIRABLE AND SERVICEABLE TANKS WHICH ARE GOING TO REMAIN WITHOUT FUEL FOR MORE THAN 72 HOURS SHALL HAVE THE INNER LINING FOGGED WITH VV-L-825/MIL-L-6081 TO PREVENT DRYING AND CRACKING OF INNER LINER. COVER EXPOSED SEALANT WITH TAPE CONFORMING TO MIL-T-22085, TYPE II, TO PREVENT SEALANT FROM COMING IN CONTACT WITH OIL. ALL EXTERIOR SURFACES OF TANKS EXPOSED METAL SURFACES OR FITTING AND ATTACHMENTS SUSCEPTIBLE TO CORROSION SHALL BE CLEANED IAW MIL-P-116 AND PRESERVED WITH A LIGHT COAT OF VV-L-825. THE SAME SHALL BE COVERED WITH MIL-B-121 AND TAPED IN PLACE WITH MIL-T-22085, TYPE II. USED (VITHANE) FUEL TANKS SHALL HAVE THE INSIDE CLEANED WITH SOAP AND WARM WATER.

PART NO	QTY REQ	NOMENCLATURE OR	SIZE	MATERIAL SPECIFICATION
11	A/R	TAPE		MIL-T-22085 TY II
10		CUSHIONING		PPP-C-1797 (5)
9		PRESERVATIVE		VV-L-825/MIL-L-6081
8		TAPE		PPP-T-42 TY I
7	A/R	WRAP		MIL-B-121 TY I GR A
6	A/R	STRAPPING	5/8 WIDTH	QQ-S-781
5	2	TOP & BOTTOM PADS	68 X 35	PPP-F-320 CF DOM (8)
4	2	SIDE PADS	67 3/8 X 17 5/8	PPP-F-320 CF DOM
3	2	END PADS	35 X 17 5/8	PPP-F-320 CF DOM
2	3	SKIDS	2 X 4 (NOM) X 37 1/4	MIL-STD-731
1	1	EXTERIOR CONTAINER		SEE PACKING

SPI NO. 01-132-7318

SPECIAL PACKAGING INSTRUCTIONS	CODE ID 98752	SPI NO. (TPO) 01-132-7318
ITEM NOMENCLATURE TANK FUEL AIRCRAFT		SHEET 2 OF 3

NOTES

1. PACKER MUST INSURE THAT TWO AFTO FORMS 20 OR EQUIVALENNT ARE ATTACHED ONE TO THE ITEM AND ONE TO THE CONTAINER. INDICATING THE ITEM HAS BEEN PURGED FOR STORAGE IAW T.O.38-1-4 BEFORE PLACING ITEM INTO CONTAINER. PURGING NOT REQUIRED ON NEW AND UNUSED TANKS.

2. PACKER MUST INSURE THAT THE TANKS ARE PRESERVED AND WRAPPED PROPERLY BEFORE PLACING IN CONTAINER.

3. BEFORE PLACING TANKS INTO CONTAINER, THE CONTAINER MUST BE CHECKED FOR PROTRUDING NAILS AND DEBRIS THAT COULD SCUFF OR DAMAGE ITEM.

4. AFTER THE TANKS ARE PACKED INTO CONTAINER, NO NAILS STAPLES, TACKS, ETC. SHALL BE DRIVEN INTO CONTAINER. USE STRAPPING ONLY FOR CLOSURE.

5. ALL VOID IN CONTAINER MUST BE FILLED WITH PPP-C-1797 TO RESTRICT MOVEMENT OF ITEM.

6. OPENING AND CLOSURE OF CONTAINER SHALL BE OF THE UNNAILED CLOSURE ONLY.

7. REPAIRABLES SHALL BE PACKAGED AS SHOWN HEREON. LEVEL C/C SHALL APPLY.

8. MARK P/N 5 (TOP ONLY) WITH SPI NUMBER. USE METHODS AND MATERIALS PRESCRIBED IN MIL-STD-129/130.

9. PLYWOOD USED IN CONSTRUCTION OF CONTAINER SHALL CONFORM TO PS 1-83, STANDARD INTERIOR WITH EXTERIOR GLUE, GRADE C/D.

10. SPECIFICATION ORDERING DATA NOT SPECIFIED (STYLE, TYPE, CLASS, GRADE, ETC.) SHALL BE THE PACKER'S OPTION.

SPECIAL PACKAGING INSTRUCTIONS	CODE ID 98752	SPI NO. (TPO) 01-132-7318
ITEM NOMENCLATURE TANK FUEL AIRCRAFT		SHEET 3 OF 3

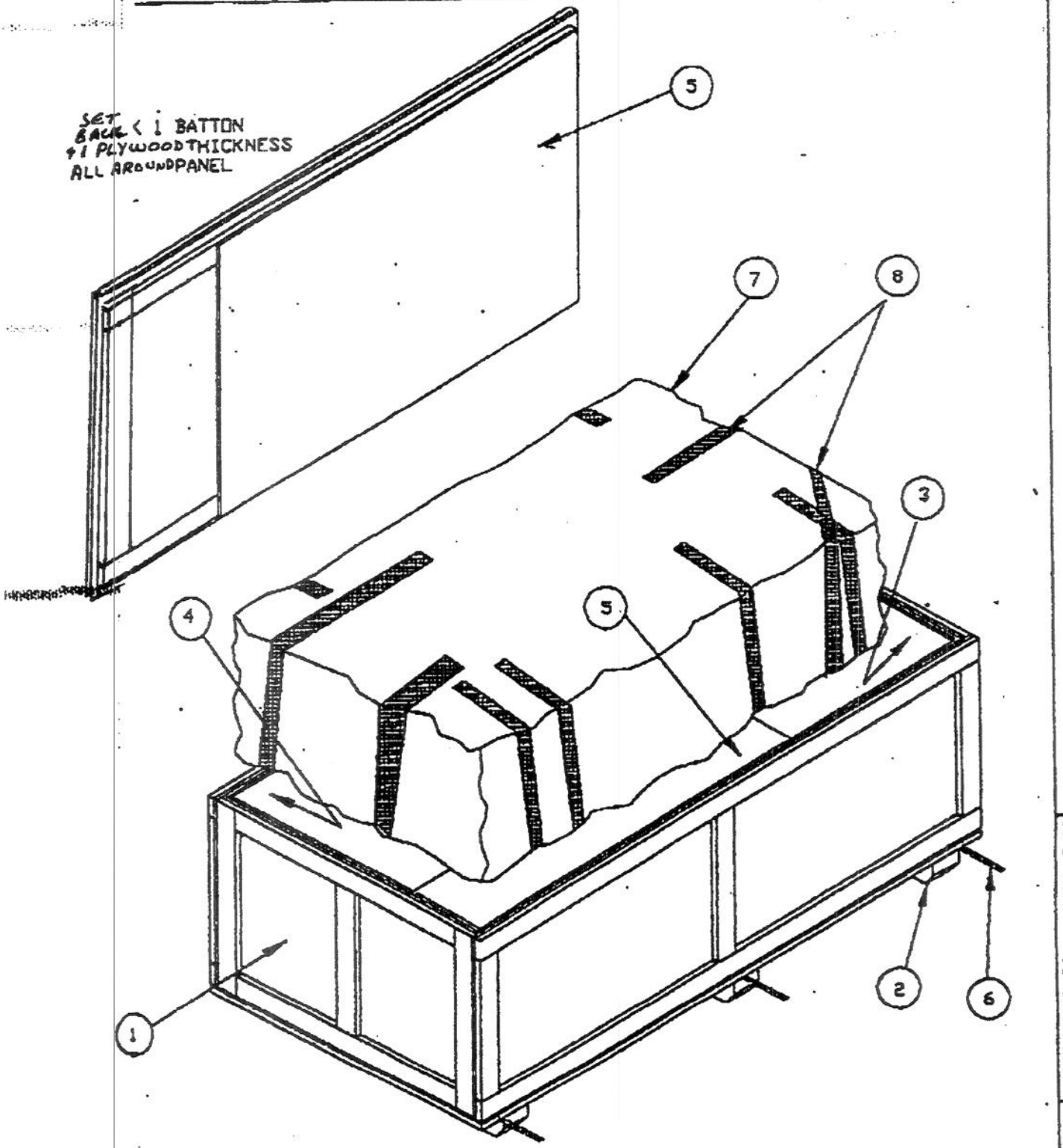

SPI NO. 01-132-7318

2169c MOD