010273489
010395794

TPO 010273489 DATED: 76076

EFFECTIVITY BLOCK		
NAT'L STOCK No.	PART No	CNTR No.
1560 010395794	65-18182-157	-1
1560 01 0273489	65-18182-158	-2

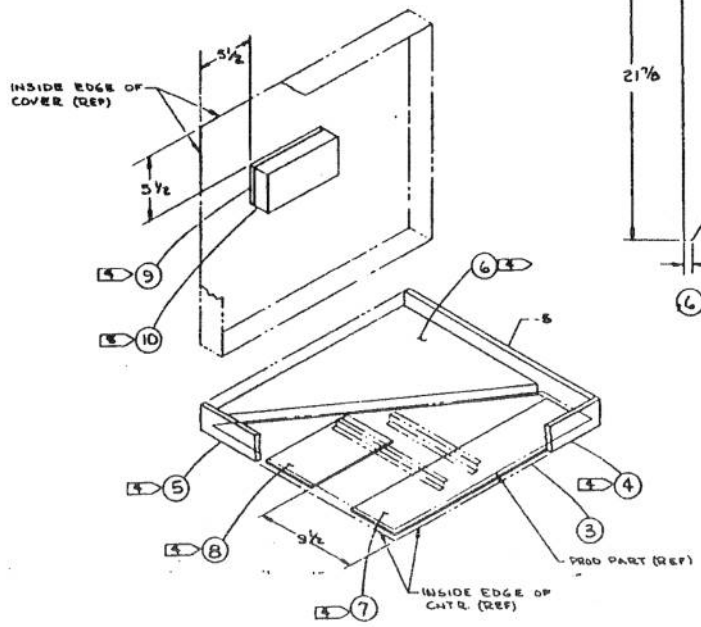

(1) CONTAINER ASSY
(2) OPP -1

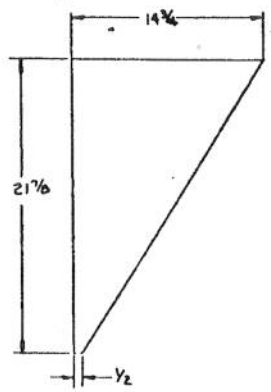

(6) SPACER BLOCK

1. FABRICATE PER PPP-B-636: STYLE (FTC), TYPE CF, CLASS DOMESTIC, VARIETY SW, GRADE 275# TEST: INSIDE CNTR. DIMS. ARE L-23 x W-21⅜ x D-3.
2. CORRUGATED FIBERBOARD PER PPP-F-320 (SEE 2a)
3. POLYURETHANE FOAM 2LB DENSITY PER MIL-C-26514 (NO 2010, UNITED FOAM CO. KENT, WA. ACCEPTABLE)
4. CEMENT, USING EZ4592 ADHESIVE (MMM-A-250) ADHESIVE PERMACEL ADHESIVE DIV, JOHNSON & JOHNSON, NEW BRUNSWICK, N.J. OR EQUIV.
5. CEMENT, USING EC1128 ADHESIVE (MMM-A-250), MINNESOTA MINING & MFG CO. LOS ANGELES, CA. OR EQUIV.
2a. LAMINATE TO REQUIRED THICKNESS USING ADHESIVE -11

MARK TPO AND NUMBER ON EXTERIOR OF CONTAINER

MARKING
IN A/W MIL-STD-129

PRECAUTIONARY MARKING
"REUSABLE CONTAINER & DUNNAGE DO NOT DESTROY"
"NOT FOR OUTSIDE STORAGE"
"TPO 0273489"

A/R	A/R	-12	ADHESIVE			5
A/R	A/R	-11	ADHESIVE			4
1	1	-10	HOLD DOWN PAD	2 x 3 x 9		3
1	1	-9	TOP PAD	1 x 3 x 9		2
1	1	-8	BOTTOM PAD	½ x 5 x 9		
1	1	-7	BOTTOM PAD	½ x 5 x 21⅞		
1	1	-6	SPACER BLOCK	1 x 14¾ x 21⅞		
2	2	-5	END PAD	½ x 3 x 20¾		
1	1	-4	SIDE PAD	½ x 3 x 22⅞		2
1	1	-3	CONTAINER			1
-	-	-2	OPP -1			
	-	-1	CONTAINER ASSY			
-2	-1					

PRESERVATION
LEVEL A METHOD III
LEVEL B
LEVEL C SAME AS LEVEL A C-1
PRESERVATION EXCEPTIONS NONE

LENGTH	DEPTH	DEPTH
23¾	23⅞	3¼
3.18	4.0	.96

CONTRACT F19628-75-C-0162
DRAFTER R. WISE 3-11-76
3/16/6
3/16/6
3/16/6
PACKAGING ENGINEERING 2-2264
PROCUREMENT SERVICE APPROVAL 76302

THE BOEING COMPANY
CORPORATE OFFICES SEATTLE, WASHINGTON 98124

SHIPPING CONTAINER
GAP COVER ASSY-WING
LEADING EDGE-NACELLE

D 81205 TPO 010273489 AWSC 65-18182-101
SCALE NONE SHEET 1 OF 1

AWSC 65-18182-101