TPO NO. 01-023-1291

REVISIONS				
ZONE	LTR	DESCRIPTION	DATE	APPROVED
		REVISED	7/6/66	
			7/20/66	

PRESERVATION AND PACKAGING

LEVEL "A" IN A/W SPEC. MIL-P-116
METHOD III DESICCANT N/A
PRESERVATIVE N/A

LEVEL "B" NOT APPLICABLE

LEVEL "C" SAME AS LEVEL "A"

CLEANING AND DRYING
IN A/W SPEC. MIL-P-116

PACKING

SHIPPING CONTAINER SHALL CONFORM TO REQUIREMENTS SPECIFIED BELOW AND LIST OF MATERIALS IN A/W REQUIRED OR STIPULATED LEVEL OF PACKING FOR THE MODE OF SHIPMENT

	SPEC	STYLE	TYPE	CL	VAR	BR
LEVEL A	PPP-B-601	A	DOM	-	-	B
LEVEL B	-	-	-	-	-	-
LEVEL C	PPP-B-601	A	DOM	-	-	B

ITEM - NET WEIGHT 8.9 DIM 61X31X5"
GROSS CUBE 15.2 CU. FT.
GROSS WEIGHT 145.0 LBS.

MARKING AND CLOSURE
MARK T.P.O. AND NUMBER ON EXTERIOR CONTAINER. "REUSABLE CONTAINER AND DUNNAGE, DO NOT DESTROY."
IN ADDITION TO OTHER SPECIFIED MARKINGS, CONTAINERS SHALL BE MARKED I. A. W. MIL-STD-129.

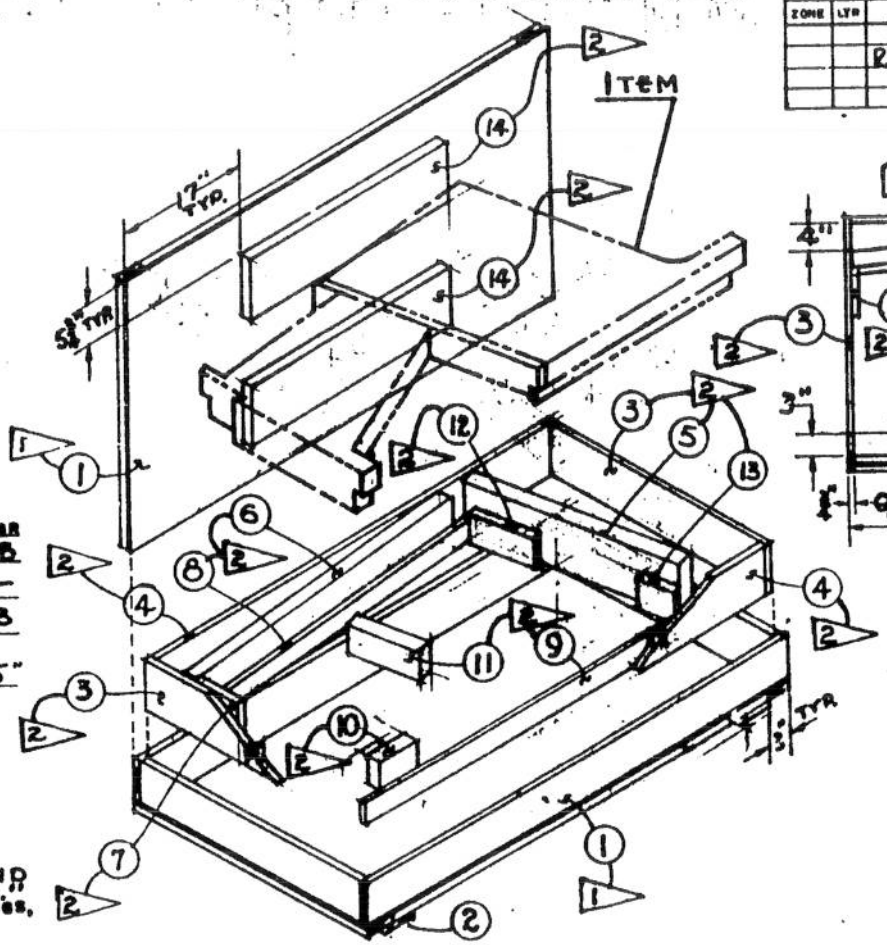

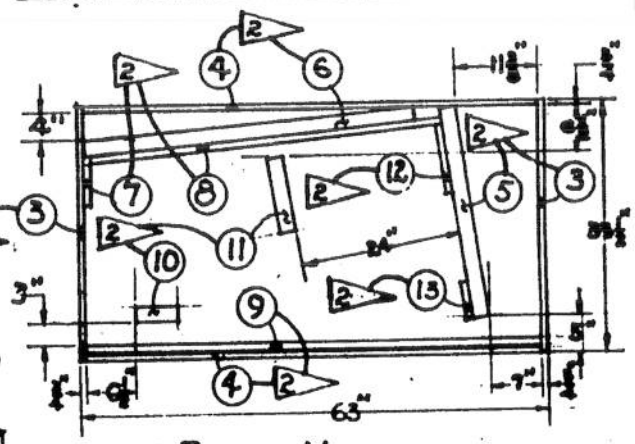

PLAN VIEW

NOTES

1. FABRICATE CONTAINER (1), TOP & BOTTOM PER PPP-B-601, STYLE A, TYPE DOMESTIC, GRADE B, (SKIDDED). SIDES & ENDS PER PPP-B-621, STYLE 4, CLASS 1, GRADE B.
2. CEMENT IN PLACE USING ADHESIVE (15), OR EQUAL.

PART NO.	NO. REQD	NOMENCLATURE OR DESCRIPTION	MATERIAL OR NOTE
19			
18			
17			
16			
15	AR	ADHESIVE - QUANTITY AS REQUIRED	MMM-A-250
14	2	HOLD DOWN - 1 1/2" x 8" x 50 3/4", 3-4 LB DENSITY	MIL-D-26514
13	1	SUPPORT PAD - 1" x 4" x 5"	PPP-F-320
12	1	SUPPORT PAD - 1" x 4" x 9"	
11	1	SUPPORT PAD - 2" x 4" x 10"	
10	1	SUPPORT PAD - 2" x 4" x 5 3/4"	
9	1	SUPPORT PAD - 1" x 5 1/4" x 6 1/2"	
8	1	SUPPORT PAD - 1" x 5 1/4" x 47"	
7	1	END STOP - 1" x 6 1/8" x 6 1/8"	
6	1	SIDE STOP - 2" x 6 1/8" x 45"	
5	1	END STOP - 2" x 6 1/8" x 28"	
4	2	SIDE PAD - 3/4" x 5 3/4" x 6 1/2"	PPP-F-320
3	2	END PAD - 3/4" x 5 3/4" x 55 1/2"	MIL-STD-731
2	2	SKID - 2" x 4" (NOM.) x 55 1/4"	PPP-B-601
1	1	CONTAINER - I.D. 65 1/4" x 55 1/4" x 6 1/2"	

UNLESS OTHERWISE SPECIFIED DIMENSIONS ARE IN INCHES
TOLERANCES ON FRACTIONS ± 1/16, DECIMALS .XX ±, .XXX ±, ANGLES ± 2°

TECH. ILLUSTRATOR R.L. TUCKER
CHECKED N.C. Cooney
APPROVED
A.F. MGR. ENGR.
CONTRACT NUMBER 64-1180-71
A.F. DESIGN ACTIVITY AUTHENTICATION
REL. STOCK NUMBER 1560-01-023-1291

U.S. AIR FORCE
OC-ALC/DSP TINKER AFB, OKLA. 73145
TITLE: BEAM ASS'Y, TRAILING EDGE, STA. 844.00
SIZE C | A.F. CODE IDENT NO. 98748 OO-ALC DSPO | DRAWING NUMBER: T.P.O. 01-023 1291
SCALE 1" = 1'-0" | SHT 1 OF 1