010229672

TPO 010229672 DATE: 76240

EFFECTIVITY BLOCK		
NAT'L STOCK No.	PART NO.	CNTR No.
1560010229672	65-1120-35	-1
	65-1120-36	-2

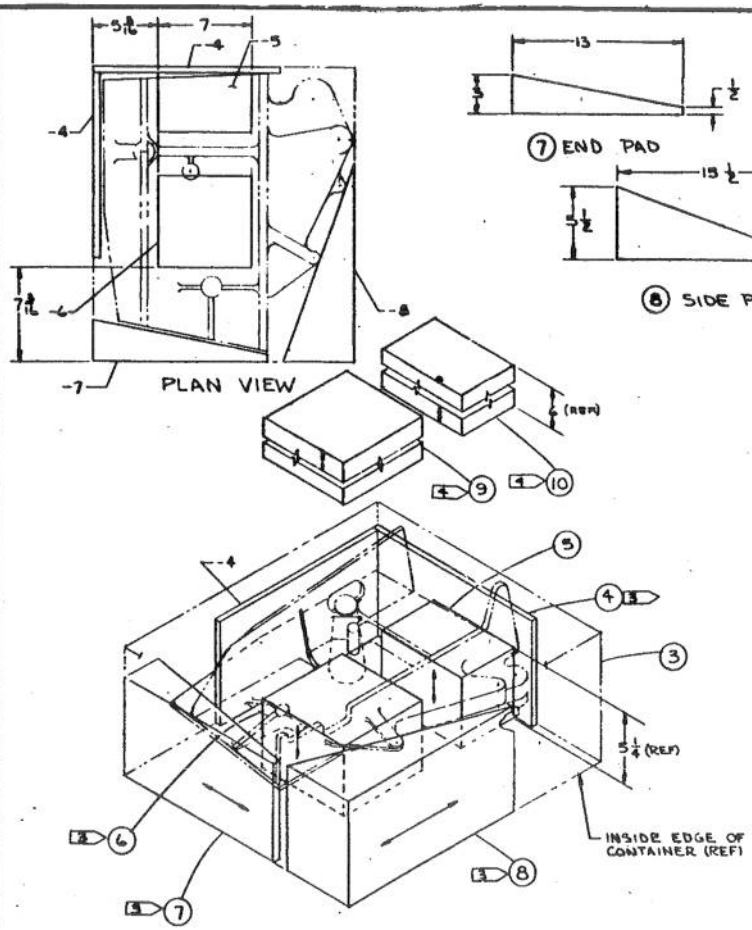

1 CONTAINER ASSY (SEE PLAN VIEW ABOVE)
2 OPP -1 CONTAINER

1. FABRICATE PER PPP-B-636 (FTC), TYPE CF, CLASS DOMESTIC, VARIETY DW, GRADE 275# TEST: INSIDE CNTR DIMS ARE L = 22 1/4 x W = 19 3/4 x D = 11 , WITH 6 INCH DP COVER.
2. CORRUGATED FIBERBOARD PER PPP-F-320
3. CEMENT IN PLACE USING EZ4392 ADHESIVE (MMN-A-250) PERMACEL ADHESIVE DIV. JOHNSON & JOHNSON NEW BRUNSWICK, N.J. OR EQUIV.
4. DO NOT CEMENT -9 & -10 DETAILS TO COVER (LID). INSTALL LOOSE ON TOP OF PART PRIOR TO CLOSURE.
5. ⟷ INDICATES FLUTE DIRECTION

MARK TPO AND NUMBER ON EXTERIOR OF CONTAINER

MARKING
IN A/W MIL-STD-129
PRECAUTION MARKING
"REUSABLE CONTAINER & DUNNAGE DO NOT DESTROY"
"NOT FOR OUTSIDE STORAGE"
"TPO 010229672"

NO. REQUIRED		PART NO.	DESCRIPTION	ZONE	STOCK SIZE AND MATERIAL	REV
A/R	A/R	-11	ADHESIVE			3
1	1	-10	HOLD DOWN		6 x 4 1/2 x 7	2
1	1	-9	HOLD DOWN		6 x 7 x 7	
1	1	-8	SIDE PAD		5 1/2 x 8 x 15 1/2	
1	1	-7	END PAD		3 x 8 x 13	
1	1	-6	SUPPORT		5 1/4 x 7 x 7	
1	1	-5	SUPPORT		5 1/4 x 4 1/2 x 5 1/4	
2	2	-4	PAD		1/2 x 8 x 14	2
1	1	-3	CONTAINER			1
—		-2	CONTAINER ASSY		—	
	—	-1	CONTAINER ASSY		—	
-2	-1					

BILL OF MATERIAL

AWSC 65-1120-101

PRESERVATION
LEVEL A METHOD III
LEVEL B
LEVEL C METHOD III
CLEANING & PRIME C-1
PRESERVATIVE COMPOUND

U.S. AIR FORCE OKLAHOMA CITY 4 A.C. APPROVED PACKAGING

DIMENSIONS AND TOLERANCES PER SPEC 8-8
UNLESS OTHERWISE NOTED DIMENSIONS ARE IN INCHES
TOLERANCES: FRACTIONS ± 1/16, DECIMALS ±, ANGLES ±
OUTSIDE DIMENSIONS

LENGTH	WIDTH	DEPTH
22 5/8	20 1/8	11 3/4
8.6	36.6	3.10

CONTRACT F19628-75-C-0162
DRAFTED R.W. WISE 3/3/76
CHECKED J.B. [illegible] 3-16
APPROVED [illegible]
APPROVED [illegible]
ENGR [illegible] 3/16
PREPARED BY 2-2264 PACKAGING ENGINEERING
PROJECT ACTIVITY APPROVAL [illegible] 76240

THE BOEING COMPANY
CORPORATE OFFICES SEATTLE, WASHINGTON 98124

SHIPPING CONTAINER
SUPPORT ASSY LOCK
MAIN LANDING GEAR

SIZE D CODE IDENT NO 81205 TPO 010229672 DWG AWSC 65-1120-101
SCALE NONE SHEET 1 OF 1

AWSC 65-1120-101