1680-00-433-4532

TPO NO. 1560-022-3365

NOTICE: WHEN GOVERNMENT DRAWINGS, SPECIFICATIONS, OR OTHER DATA ARE USED FOR ANY PURPOSE OTHER THAN IN CONNECTION WITH A DEFINITELY RELATED GOVERNMENT PROCUREMENT OPERATION, THE UNITED STATES GOVERNMENT THEREBY INCURS NO RESPONSIBILITY, NOR ANY OBLIGATIONS WHATSOEVER, AND THE FACT THAT THE GOVERNMENT MAY HAVE FORMULATED, FURNISHED, OR IN ANY WAY SUPPLIED THE SAID DRAWINGS, SPECIFICATIONS, OR OTHER DATA IS NOT TO BE REGARDED BY IMPLICATION OR OTHERWISE AS IN ANY MANNER LICENSING THE HOLDER OR ANY OTHER PERSON OR CORPORATION, OR CONVEYING ANY RIGHTS OR PERMISSION TO MANUFACTURE, USE, OR SELL ANY PATENTED INVENTION THAT MAY IN ANY WAY BE RELATED THERETO.

DATA SHOWN HEREON ALSO APPLIES TO THE FOLLOWING ITEMS

FED STOCK NO.	PART NO.
1680-433-4532	4C51952-109B
[redacted]	[redacted]

REVISIONS

SYM	DESCRIPTION	DATE	APPROVED
[redacted]			
[redacted]			

PRESERVATION AND PACKAGING

LEVEL A—IN A/W SPEC MIL-P-116, METHOD I

DESICCANT: N/A

LEVEL B: SAME AS LEVEL A

LEVEL C: SAME AS LEVEL A

CLEANING AND DRYING

IN A/W SPEC MIL-P-116

PRESERVATION COMPOUND

MIL-G-23827

CUSHIONING AND DUNNAGE

AS INDICATED IN LIST OF MATERIALS AND ON NOTES — APPLICABLE TO ALL LEVELS.

PACKING

SHIPPING CONTAINER SHALL CONFORM TO REQUIREMENTS SPECIFIED BELOW AND LIST OF MATERIALS IN A/W REQUIRED OR STIPULATED LEVEL OF PACKING FOR THE MODE OF SHIPMENT.

	SPEC	STYLE	TYPE	CL	VAR	GR
LEVEL A:	PPP-B-601	A	OVERSEAS			
LEVEL B:	PPP-B-576	A		1		
LEVEL C:	PPP-B-576	A		1		

GROSS CUBE

LEVEL	A	B	C
	4.9	4.9	4.9

GROSS WEIGHT

LEVEL	A	B	C
	47	37	37

MARKING AND CLOSURE

MARK IN ACCORDANCE WITH MIL-STD-129

CLOSE IN A/W CONTAINER SPEC.

NOTES:

1.1 SUPPORT ASSEMBLY
NET DIMENSIONS: 30 x 14 x 9; NET WEIGHT: 10 lbs

1.2 PRESERVE BEARINGS ONLY. WRAP PRESERVED AREA AND PROTECT UNIT FROM ITEM 1 WITH PAPER CONFORMING TO SPECIFICATION MIL-B-121, GRADE A.

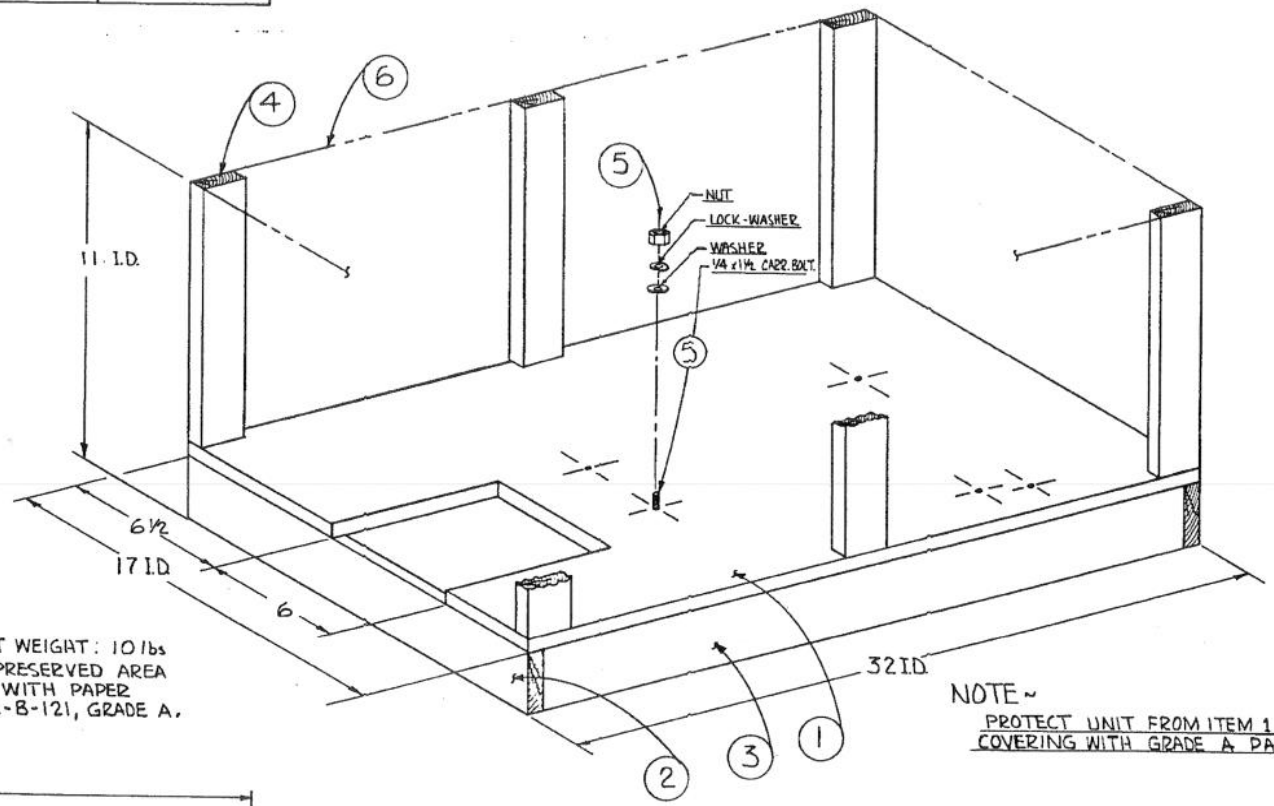

NOTE ~
PROTECT UNIT FROM ITEM 1 BY COVERING WITH GRADE A PAPER.

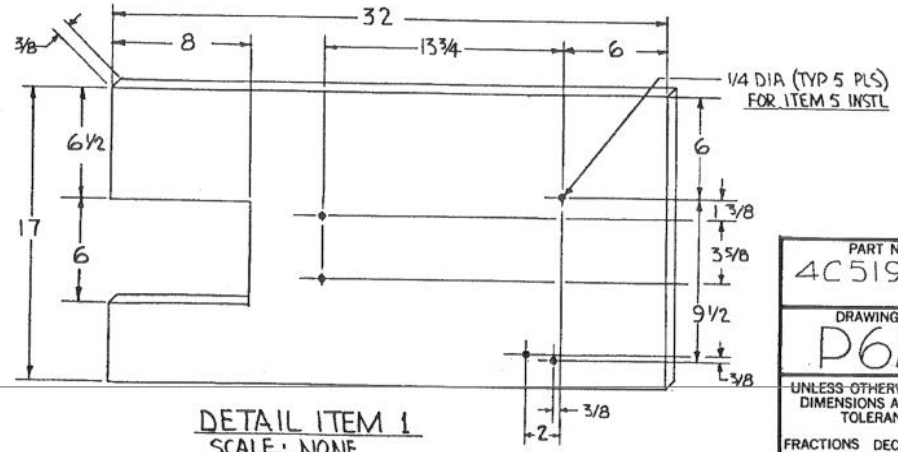

DETAIL ITEM 1
SCALE: NONE

PART NO.	NO. REQD	NOMENCLATURE OR DESCRIPTION		MATERIAL OR NOTE
6	1	32 L x 17 W x 11 H I.D.	EXTERIOR CONTAINER	SEE PACKING
5	5	1/4 DIA x 1 1/2 L	CARR. BOLT-W/ WASHER, LOCK-WASHER & NUT	STEEL
4	6	1 x 2 NOM x 9	VERTICAL CLEAT	LUMBER
3	2	1 x 2 NOM x 30 1/2	CLEAT-SIDE	LUMBER
2	2	1 x 2 NOM x 17	CLEAT-END	LUMBER
1	1	3/8 x 17 x 32	PARTITION ~ FLOOR SEE NOTE 1.2	PLYWOOD

BILL OF MATERIALS OR PARTS LIST

PART NUMBER 4C51952-109A	ADDITIONAL CODE IDENT NO.	DRAFTSMAN L.E. Goodale	DATE 27 Jun 69
		CHECKER T.N. GROOT	8 17 69
DRAWING NUMBER P628A		DESIGN ENGR T.N. GROOT	8 17 69
			/ /
UNLESS OTHERWISE SPECIFIED, DIMENSIONS ARE IN INCHES TOLERANCES ON FRACTIONS ± 1/16 DECIMALS ± ANGLES ±		DESIGN ACTIVITY AUTHENTICATION (NAME, SYMBOL AND DATE)	
		SEP 30 1969	LOC 2323

CONVAIR DIVISION OF GENERAL DYNAMICS
SAN DIEGO, CALIFORNIA

SUPPORT ASSEMBLY CONTAINER

CODE IDENT	SIZE	TRANSPORTATION PACKAGING ORDER NO.
14170	C	1560-022-3365 [redacted]
	SCALE NONE	SHEET 1 OF 1

PUBLICATION AUTHORITY T.O. 00-85-1

ENGINEERING DRAWING LAYOUT C